FS-740

Tag: _____

12" Square x 8" Deep Sanitary Floor Sink

SPECIFICATION: Watts Drainage FS-740 12" (305) square x 8" (203) deep sanitary floor sink with white porcelain enamel coated interior, loose set porcelain enamel coated cast iron grate, aluminum dome bottom strainer, and no hub (standard) outlet.

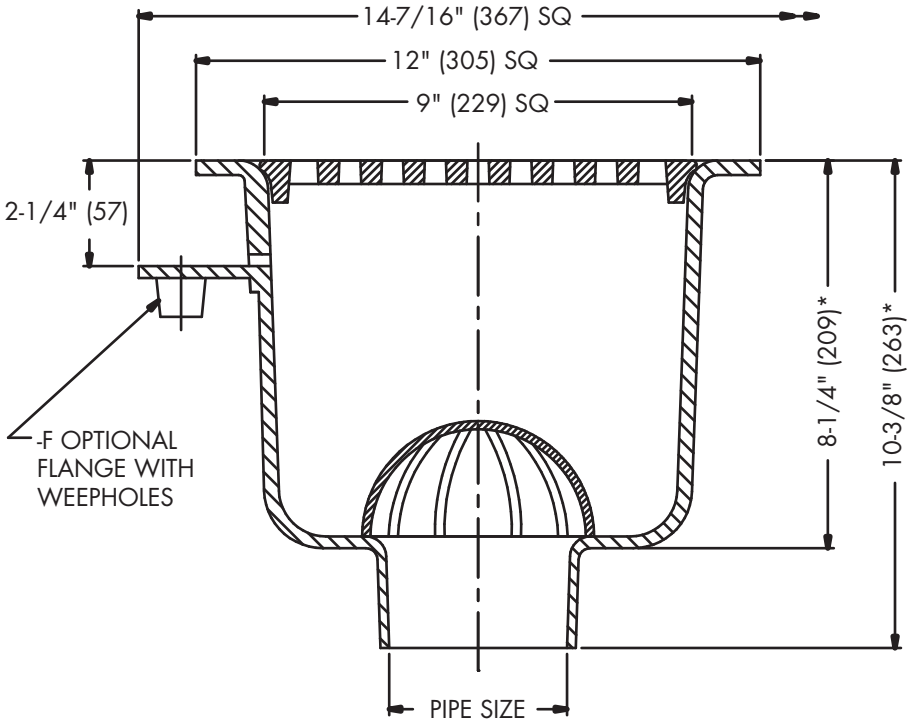

*ADD 5/8" (16) FOR –1 NICKEL BRONZE TOP OR –3 STAINLESS STEEL TOP

Pipe Sizing (Select One)		
Suffix	Description	
2	2"(51) Pipe Size	☐
3	3"(76) Pipe Size	☐
4	4"(102) Pipe Size	☐

Outlet Type (Select One)		
Suffix	Description	
NH	No Hub (MJ)	☐
P	Push On	☐

Options (Select One or More)		
Suffix	Description	
-F	Flange with Weepholes	☐
-FC	Flange w/ Weepholes & Flashing Clamp	☐
-1	Nickel Bronze Top	☐
-3	Stainless Steel Rim and Grate	☐
-5	Sediment Bucket	☐
-6	Vandal Proof (-1, -3 Only)	☐
-7	Trap Primer Tapping	☐
-9	Hinged Gate (-1 Only)	☐
-21	Secondary Strainer	☐
-33	Less Grate	☐
-128	Grate with 2-1/2"(64) Center Opening	☐
-150	1/2 Grate	☐
-175	3/4 Grate	☐
-F4-1	4" Round Nickel Bronze Funnel	☐
-F6-1	6" Round Nickel Bronze Funnel	☐
-G-1	4x9" Oval Nickel Bronze Funnel	☐
-US	Buy American Compliant (Available with -1 Only)	☐

Free Area Sq. In.
31

Job Name _____ Contractor _____

Job Location _____ Contractor's P.O. No. _____

Engineer _____ Representative _____

WATTS Drainage reserves the right to modify or change product design or construction without prior notice and without incurring any obligation to make similar changes and modifications to products previously or subsequently sold. See your WATTS Drainage representative for any clarification. Dimensions are subject to manufacturing tolerances.

Specification Drainage Products

USA: 100 Watts Road, Spindale, NC, 28160-2298; TEL: 828-288-2179 TOLL-FREE: 1-800-338-2581 www.watts.com